EMIX and EMIX TANK

MAIN FEATURES

CONNECTION OF EMIX/EMIX TANK WITH iSERIES AND iM

The outdoor units from the iSERIES and iM range are fitted with a special connection port exclusively for connecting the EMIX/EMIX TANK unit via refrigerant pipes.

HOW EMIX WORKS

EMIX does not offer an instantaneous solution for domestic hot water production, like a gas boiler, for example. For EMIX to operate correctly, it must heat the water in any type of tank, from an electric boiler to a storage tank with integration of a solar heat system. The unit will periodically sample water from the storage tank, take the temperature of the water and, if necessary, increase the temperature value until it reaches the set-point.

Operating one or more electric heating elements (up to three), if built-in to the storage tank, will generate an anti-legionella cycle (if required) and a back-up that can be used if fast heating is needed or in the event of a system malfunction. An optional temperature sensor can be installed in the storage tank to optimise the thermal load.

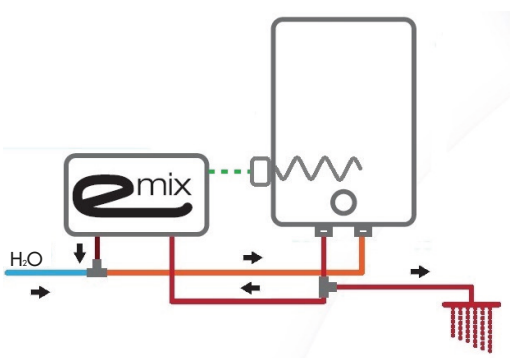

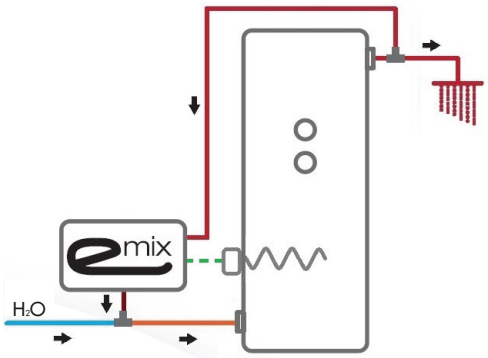

HOW EMIX TANK WORKS

EMIX TANK integrates a refrigerant gas/domestic hot water heat exchanger and a glazed ceramic-coated steel storage tank all in a single solution.

The unit is fitted with two temperature sensors (which can be selected alternately) based on the set-point, which activate the modulating, variable speed pump. There are two electric heating elements available to produce an anti-legionella cycle (if required) and a back-up that can be used if fast heating is needed or in the event of a system malfunction. The set-up is complete with a thermostatic mixing valve to provide the correct water temperature for the user.

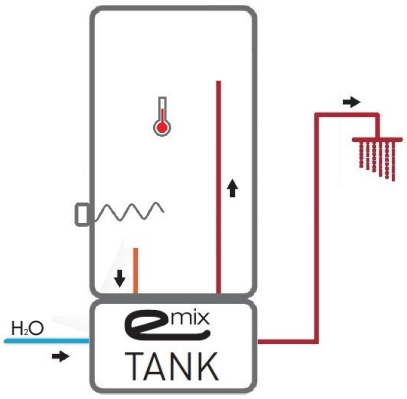

OPERATING MODE

Setting the desired temperature (set-point) for domestic hot water is very easy. The set-point is configured using one single button and the temperature level is indicated via five green LEDs.
The EMIX/EMIX TANK regulation system will take care of the rest and will aim to meet all the heat load requirements, distributing the energy from the heat pump autonomously to ensure that the rooms are heated and that domestic hot water is produced.

INTEGRATION WITH SOLAR HEAT SYSTEMS

The solar heat systems that are specifically designed to produces domestic hot water are widely used throughout Europe (especially southern Europe).
There are two types of solar heaters; natural circulation and forced circulation.
EMIX can be connected to both of these types of systems. In this case, it will function as an integrated component, producing hot water when the efficiency of the solar panels is low (in winter or at night), or when the user's water demand becomes significant.

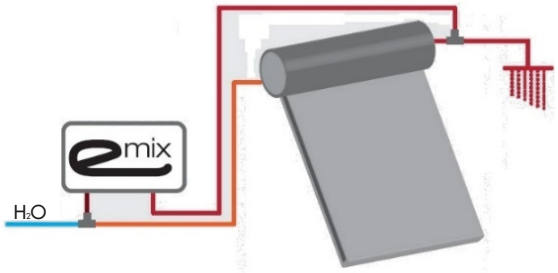

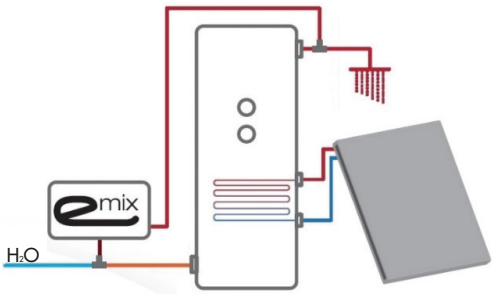

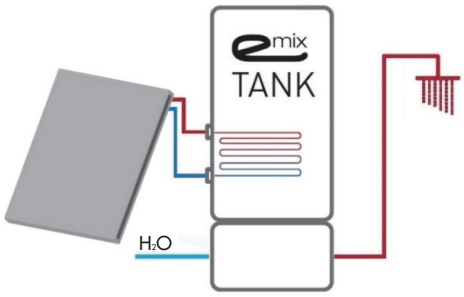

EMIX TANK

EMIX TANK 200 V2

EMIX TANK 300 V2

Code	Model
387030198	EMIX TANK 200 V2
387030199	EMIX TANK 300 V2

EMIX TANK 200 V2 and EMIX TANK 300 V2, with the same features as the EMIX but fitted inside a rectangular white metal chassis, with a built-in ceramic-coated tank with a 200-300 liters capacity, suitable for domestic hot water, provided with backup heater, circulation pump and solar exchanger for connection to third-party solar panels.

DOUBLE WALL | EC PUMP | ELECTRIC BACK UP | iCOP

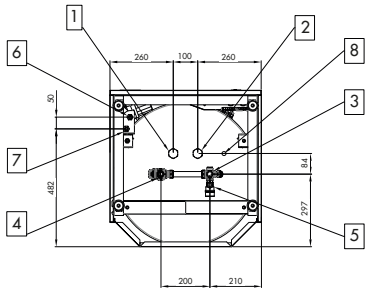

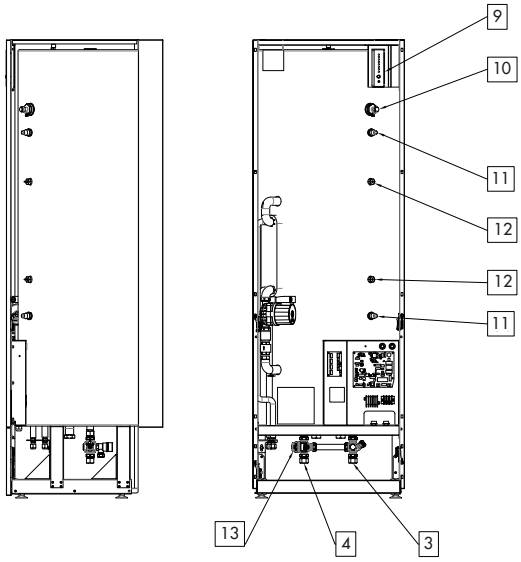

1. Solar thermal energy exchanger inlet
2. Solar thermal energy exchanger outlet
3. Domestic cold water inlet
4. Domestic hot water outlet
5. Safety valve
6. Refrigerant gas inlet
7. Refrigerant gas outlet
8. Solar thermal energy sensor probe
9. Control panel
10. Magnesium anode
11. Electric backup heater
12. Temperature sensors
13. Thermostatic mixing valve

Technical data		EMIX TANK 200 V2	EMIX TANK 300 V2
Electric power supply	V/Ph/Hz	230/1/50	
Maximum power input (without electric heater)	W	60	
Maximum power input (with electric heater)	W	2000	
Hydraulic connections	mm	Ø 22	
Gas connections	inch	3/8" - 3/8" (1/2" - 1/2" per AEI1G140EMX)	
Solar thermal energy exchanger connections	inch	G 1"	
Maximum refrigerant pipe length	m	10	
Maximum height difference between indoor unit and outdoor unit	m	10	
Maximum height difference to other iSERIES indoor unit	m	5	
Additional gas charge (if required)	g/m	15 for pipes G 3/8" - G 3/8" (20 per G1/2")	
Tank volume	l	200	300
Net weight	kg	103	133
Weight with packaging	kg	115	145
Net dimension (H./W./D.)	mm	1460/620/640	1875/620/640
Maximum operating pressure (PSV set)	bar	6	
Sound power level	dB(A)	35	

MODEL		EMIX TANK 200 V2		
Connected to		**AEI1G50EMX**	**AEI1G65EMX**	**AIM06EMX**
ERP class (*)	-	A	A	A
Load profile (tapping)	-	L	L	L
Water heating energy efficiency (**)	η_{HW}	105	104	105
Annual energy consumption (**)	kWh	979	981	972
COP_{DHW}	-	2.53	2.51	2.51
Heating-up time (from 10 °C)	h:m	2:47	2:36	3:09
Final reference water temperature	°C	50	50	50
Maximum quantity of mixed water at 40 °C	l	240	240	240

MODEL		EMIX TANK 300 V2					
Connected to		**AEI1G80EMX**	**AIM08EMX**	**AEI1G110EMX**	**AIM11EMX**	**AEI1G140EMX**	**AIM14EMX**
ERP class (*)	-	A	A	A	A	A	A
Load profile (tapping)	-	XL	XL	XL	XL	XL	XL
Water heating energy efficiency (**)	η_{HW}	116	106	106	106	112	105
Annual energy consumption (**)	kWh	1447	1587	1581	1586	1490	1601
COP_{DHW}	-	2.78	2.56	2.57	2.55	2.71	2.51
Heating-up time (from 10 °C)	h:m	3:04	3:33	2:47	2:25	2:08	2:24
Final reference water temperature	°C	48	48	48	48	48	48
Maximum quantity of mixed water at 40 °C	l	354	354	354	354	354	354

(*) with test method according to EN 16147
(**) avarage season

SOLAR THERMAL ENERGY EXCHANGER PRESSURE DROP

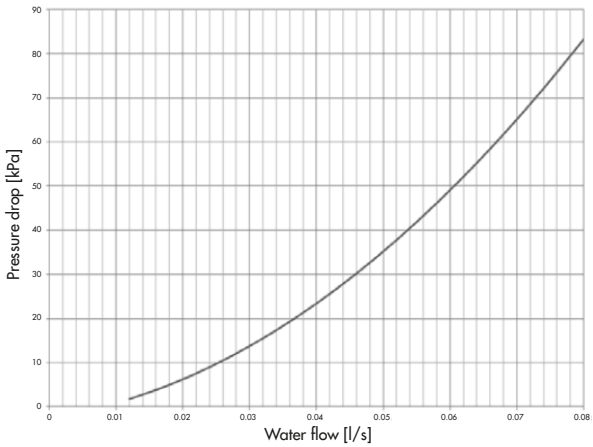

Exchanger surface area: 1.4 m^2

INSTALLATION DIAGRAMS

DIAGRAM 1

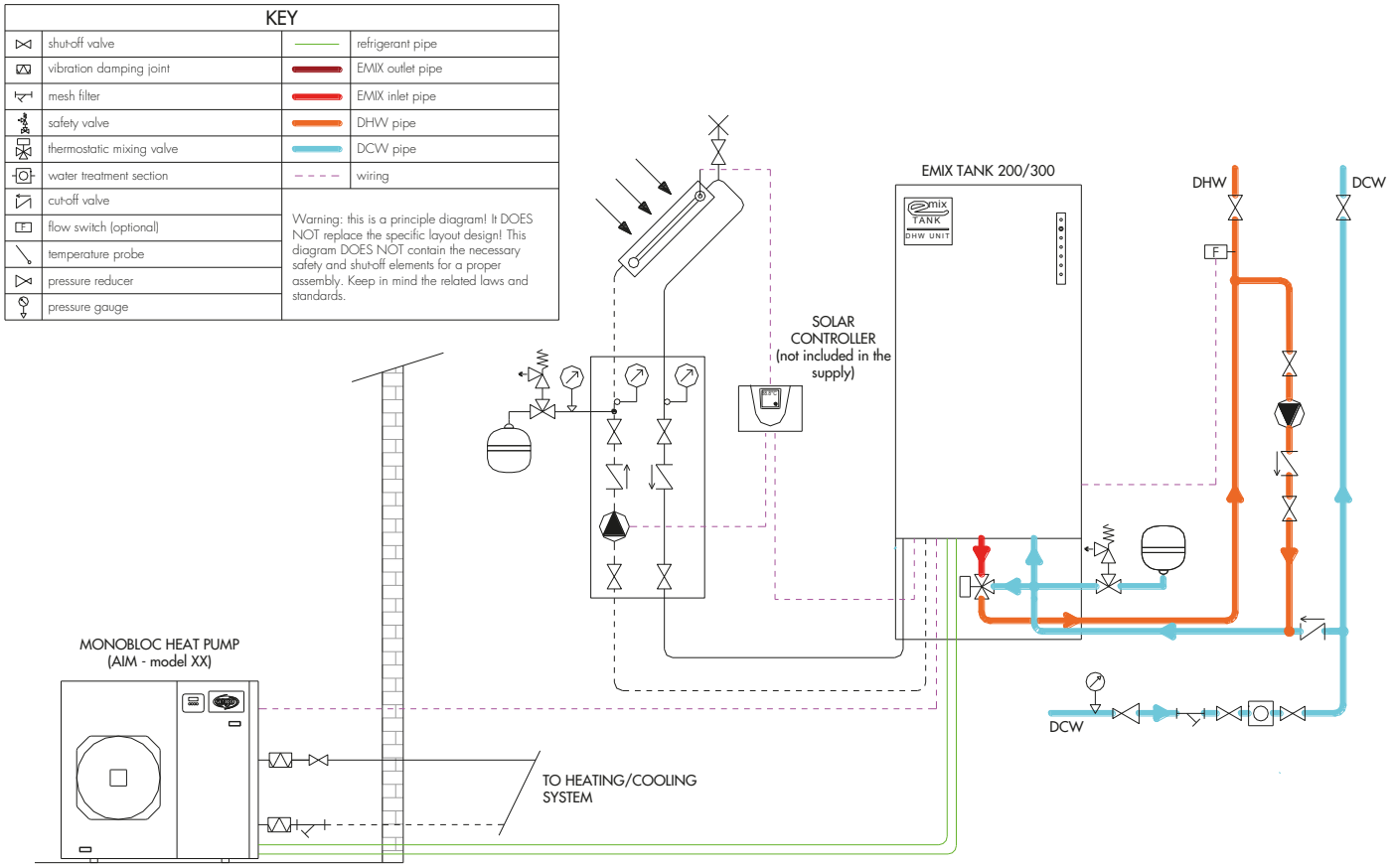

Diagram showing EMIX TANK connected to an iM heat pump.
Flow switch (optional) to optimise the anti-legionella cycle and connection to a solar thermal system (not in our scope of supply).

DIAGRAM 2

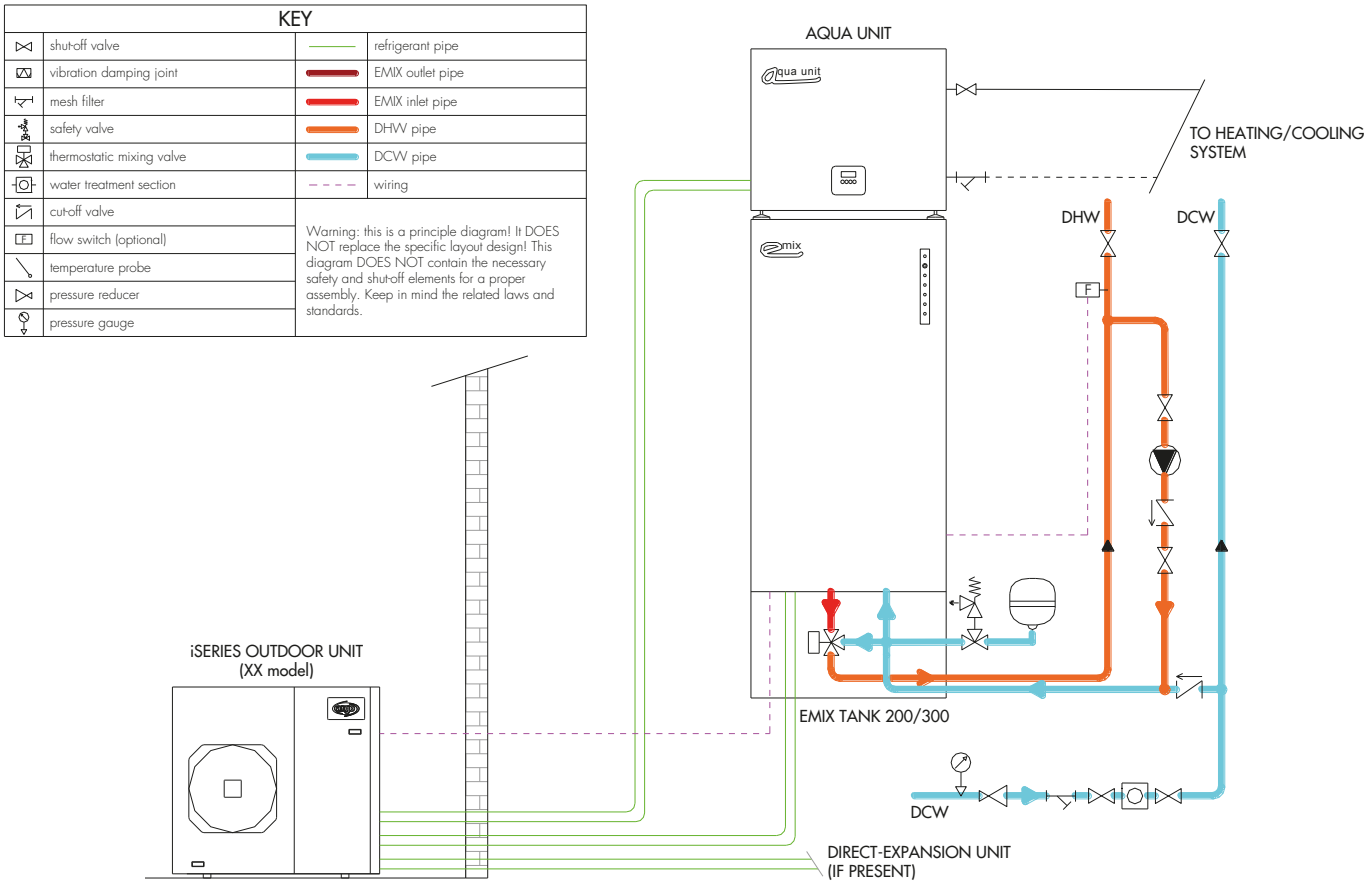

Diagram showing EMIX TANK connected to an iSERIES system.
The AQUA UNIT module easily and practically fits on top of the EMIX TANK, reducing the installation space.
Flow switch (optional) to optimise the anti-legionella cycle.